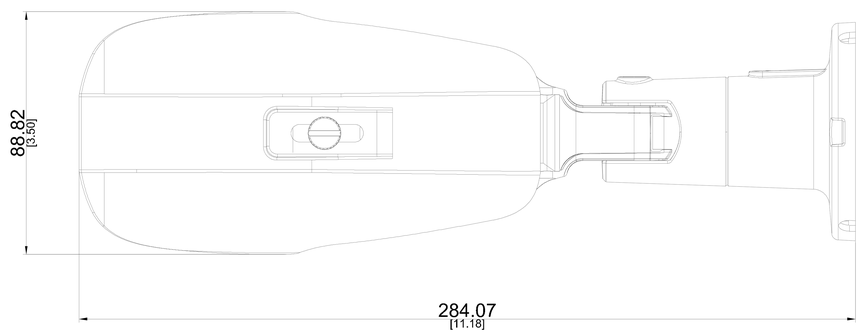
88.82
[3.50]
284.07
[11.18]

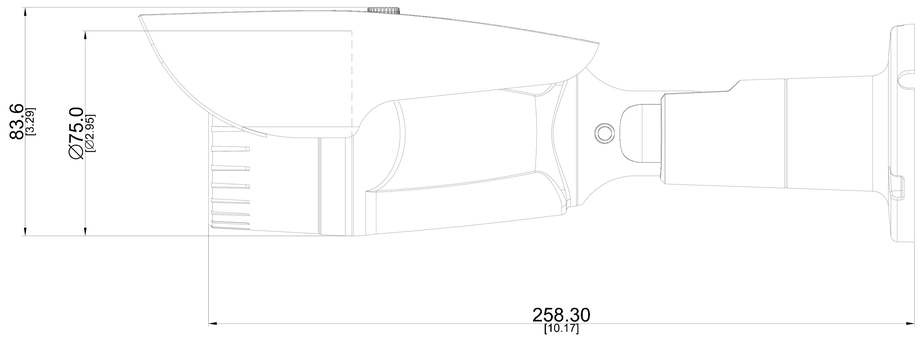
83.6
[3.29]
Ø75.0
[Ø2.95]
258.30
[10.17]

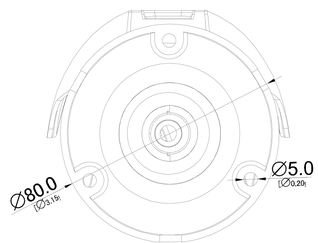
Ø80.0
[Ø3.15]
Ø5.0
[Ø0.20]